# SPECIFICATION SHEET

TOA DKK

## IMMERSION TYPE PH/ORP SENSOR WITH ULTRASONIC CLEANER

## □HC-7 Series

Various cleaning methods are available to improve measurement reliability and reduce maintenance in all conditions of pH and ORP electrodes.

Please select the most effective cleaning method suitable for the installation site.

### Ultra Sonic Cleaning Method

By efficiently irradiating the sensitive part with ultrasonic waves, the cleaning effect can be obtained due to its cavitation effect. In addition, the use of the burst oscillation method (intermittent irradiation) has improved the cleaning effect.

**Immersion type: UHC-7D (page 2)**

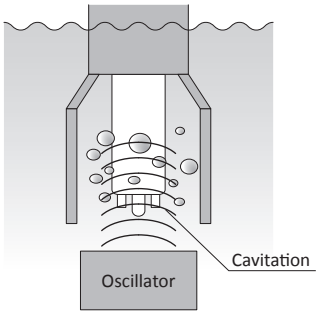


### Brush cleaning

Polypropylene clean brushes intermittently swing the sensitive area and remove any fouling by 10 or more brushing operations.

**Immersion type: BHC-7C (page 4)**

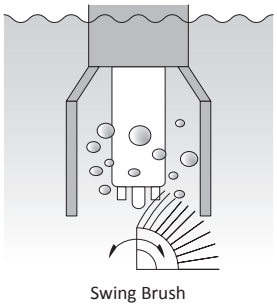


### Water jet cleaning system

Intermittent injection of washing water injected from a jet nozzle into a sensitive part removes any fouling by pressure.

**Immersion type: JHC-7C (page 7)**

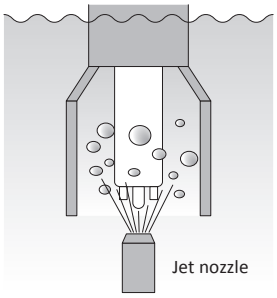


### Pulse air-jet cleaning system

Clean by high-speed water flow generated when compressed air, which is intermittently injected from the jet nozzle, expands in water.

**Immersion type: PHC-7D (page 18)**

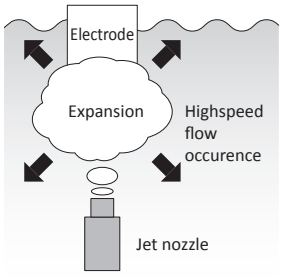


Sensitive parts such as glass or platinum sensor, liquid junction, and temperature compensation sensor are placed downward for pH and ORP electrodes.

Therefore, various cleaning methods work more effectively.

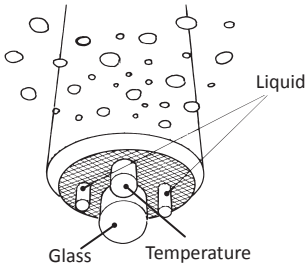


### Chemical Cleaning Method

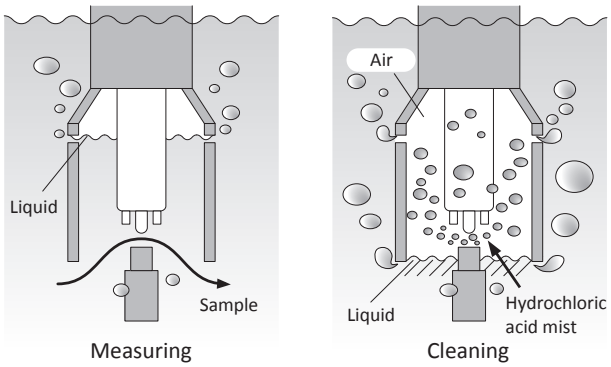


A large amount of air and chemicals (typically 5% hydrochloric acid) are injected intermittently from the jet nozzle to chemically dissolve and remove the crystalline pollution adhering to the electrode sensitive part.

**Immersion type: RHC-7C (page 11)**

### Jet cleaning with lift-up system

With a water-jet and chemical solution (e.g. 5% hydrochloric acid) by pulling Electrode Holder up from the sample water. You can also clean the entire Electrode Holder.

**Immersion type: LHC-7D (page 23)**

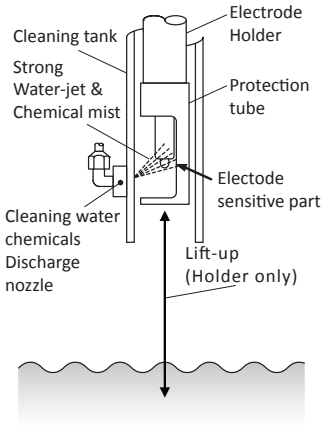

# SPECIFICATION SHEET

TOA DKK

## IMMERSION TYPE SENSOR WITH ULTRASONIC CLEANER

**UHC-7D**
**UHC-G7D**

○This pH/ORP sensor has an immersion type electrode holder combined with a brush cleaner.
○The sensing portion of electrode is continuously irradiated by ultrasonic waves and the resultant cavitation effect prevents fouling adhesion to the electrode.
○Burst oscillation method (intermittent irradiation) is adopted to improve cleaning effectiveness.
○Maintenance work such as calibration with standard solution can be easily carried out by simply detaching the electrode holder.

### Standard Specifications

| | |
|---|---|
| Product Name | : Immersion type sensor with ultrasonic cleaner |
| Model | : UHC-7D / UHC-G7D |
| Measurement Object | : pH/ORP |
| Installation Method | : Immersion type |
| Cleaning Method | : Continuous irradiation of ultrasonic waves |
| Oscillation Method | : Burst oscillation method |
| Ambient Temperature | : -5 to 50˚C |
| Sample Conditions | : Temperature... -5 to 60°C (no freezing.) |
| | : Pressure...Atmospheric |
| | : Electric conductivity...100μS/cm or more |
| Ultrasonic Frequency | : Approx. 70kHz |
| Power Requirements | : 100 to 240V ±10% 50/60Hz |
| Power Consumption | : Approx. 20VA or less |
| Wetted Materials | : SUS316, fluororubber (FKM) Polypropylene (In the case of HC-763) |
| Weight | : Approx. 5kg |
| Structure | : Rainproof type (IP55) |
| Paint colour | : Metallic silver and blue |
| Combination equipment | : Mounting bracket; ZC-1 or ZC-2 Mounting flange (open flange); ZFK-1 or ZFK-2 |

Typical combination of holder and electrode

| Model | Holder | Holder material | Integrated pH electrode | Integrated ORP electrode | |
|---|---|---|---|---|---|
| UHC-7D | HC-763 | Polypropylene | 5600 | 2600 | 2605 |
| | HC-703C | PVC | | | |
| UHC-G7D | HC-G7D | Polypropylene or PVC | GSS-304B | PSS -304B | ASS -304B |

Note: For ORP electrodes, the measurement value of the ultrasonic cleaner that refreshes the sensing tip is affected by sample. This possibility is high especially in the case of ORP control under sewerage and wastewater treatment.
In this conditions, PHC-7D Pulse Air Jet Cleaner is recommended.

### Configuration

(Typical configuration with Model HDM transmitter)

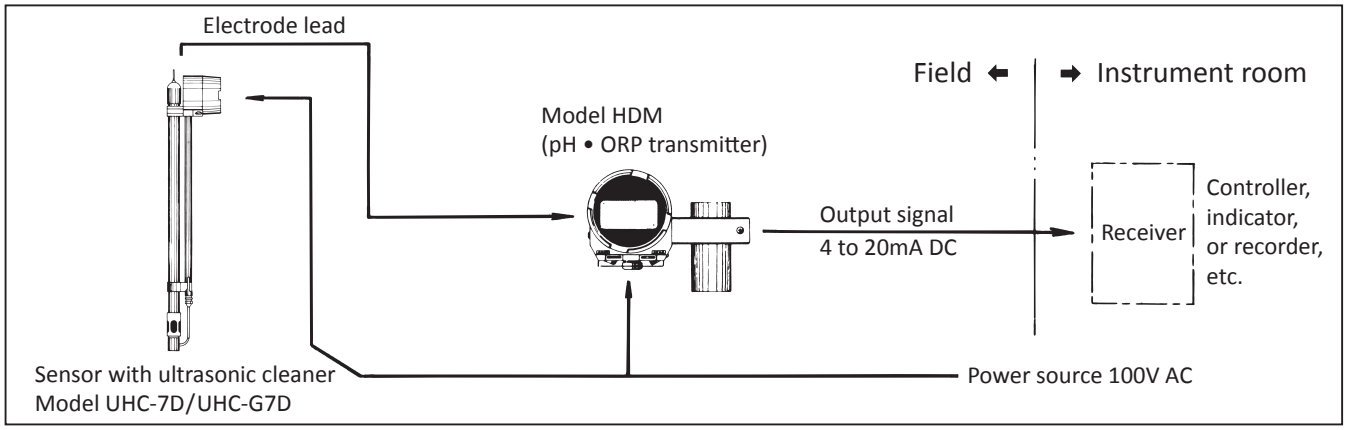

## Terminal Connections

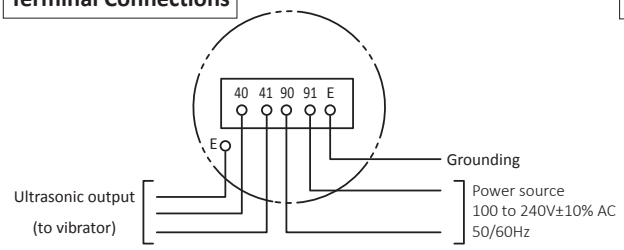


## Dimensions

Unit : mm

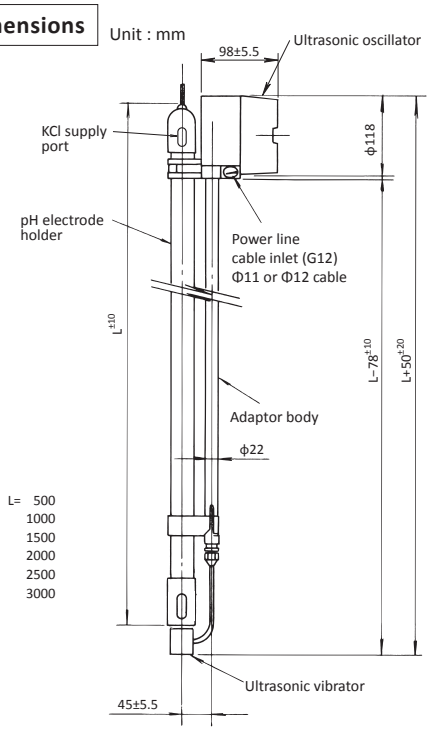


## Typical installation

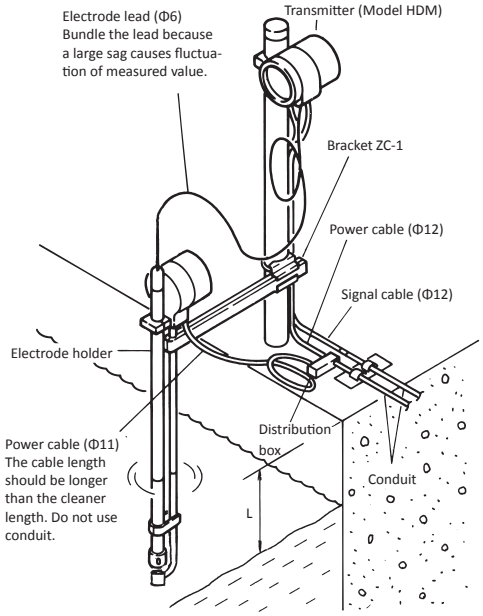


The required length of electrode holder is L + (500 to 1000), where L is the distance from the water surface.

<Note>
To be able to draw up the cleaner for its functional check, bundle the power cable by a length equivalent to the total length of the cleaner.

## Product code

UHC7D-0-□□□□□□□□□□□

- **Type of oscillator**
  - A ····· intergrated type (standard)
  - B ····· Separated type*1
- **Wetted part materials in cleaning part**
  - 1 ····· SUS316 (standard)
  - 2 ····· Vibrator, titanium, supporting pipe (PP)*2
  - 3 ····· Vibrator, titanium, supporting pipe; SUS316L
- **Combined holder (no separate order required)**
  - 0 ····· No holder
  - 1 ····· Polypropylene (PP) holder : HC-763
  - 2 ····· Clear PVC holder : HC-703C
- **Length of combined holder*3**
  - 1 ····· 0.5m ↑The sensor length depends on this holder
  - 2 ····· 1.0m
  - 3 ····· 1.5m
  - 4 ····· 2.0m
  - 5 ····· 2.5m
  - 6 ····· 3.0m
- **Electrode to be combined**
  - 0 ····· No electrode
  - A ····· pH. general use, normal temperature 5600
  - 1 ····· ORP(Pt). general use normal temperarure 2600★
  - 2 ····· ORP(M). for sewage (human waste) 2605★
  - 8 ····· Custom spec*4
- **Electrode lead length**
  - 0 ····· No electrode
  - K ····· 5m (holder length 2m or less)
  - M ····· 10m
- **Surface finish (painting)*5**
  - A ····· Standard painting
  - B ····· Heavy-duty Anti-corrosion painting
- **Arrester*6**
  - 0 ····· Nill
  - 1 ····· Equipped
- **Markings**
  - 0 ····· Japanese
  - 1 ····· English
- **Examinant**
  - 0 ····· None
  - 1 ····· Present (inspection mark affixed)
  - 2 ····· Present (inspection mark and approval certification affixed)

★ Official approval not applicable

Custom spec. code;
Numeric digit: 9
Alphabet: Z

*1. When oscillator is separated, cable (OD φ12, 6m from oscillator to detector) is supplied (including holder length)
*2. For oscillator titanium and support tube PP, it is limited to separate type oscillator. Combination holder length is 2m max.
*3. The length of the combination holder is 3m for PP-made material and 4m for transparent PVC-type. For demands exceeding 4m, the drop-in type of GSS-electrode (custom-made product) can be used.
*4. Please contact us for mounting ex-model 6462 or 5700.
*5. Standard coat of oscillator, melamine resin is used for under and final coatings. The average film thickness is to be 30μm or more for melamin under / final coating. Average film thickness of heavy duty epoxy resin under, intermediate, and the polyurethane resin final coating is 100μm or more .
*6. Ceramic serge arrester (easy type) is attached to power supply line.
*7. Max. sample temperature is 60°C.

For the product code of UHC-G7D, refer to the spec sheet of "GSS / PSS / ASS series tip replaceable type immersion detector for pH / ORP electrode □HC-G7 / G9 type holder".

# SPECIFICATION SHEET

TOA DKK

## IMMERSION TYPE SENSOR WITH BRUSH CLEANER BHC-7C

○This pH/ORP sensor is an immersion type electrode holder combined with a brush cleaner.
○The sensor part of the electrode is cleaned by a swinging brush on a cyclic basis to prevent fouling build-up. Maintenance work such as calibration with standard solution can be easily carried out by simply detaching the electrode holder.
○BHC-7C type, has a built-in timer to set the cleaning cycle and duration. Output of the cleaning in progress signal to the converter eliminates disturbance of the control system.

### Standard Specifications

Product Name : Immersion type pH/ORP sensor with brush cleaner
Model : BHC-7C
Measurement Object : pH/ORP
Installation Method : Immersion type
Cleaning Method : Intermittent cleaning using swinging brush
Cleaning Cycle* : 0.1 to 3h (optionally up to 12h)
Cleaning Duration* : 0 to 1min
"Under Cleaning" Signal Duration : Same as cleaning duration
Input/Output Signals : Under cleaning signal output 1a, 1c (2 types) Contact capacity...125V AC, 1A
External cleaning start input
Cleaning starts when; contacts closed for 100mS or more, no-voltage contact capacity...30V DC, 0.1A or more
Cleaning stop signal input
Cleaning stops when; contacts opened (normally short-circuitted) contact capacity...125V AC, 3A or more
Ambient Temperature : -5 to 80˚C (Do not freeze movable part)
Sample Conditions : Temperature...-5 to 50˚C (Do not freeze. Range varies depending on combination holder spec)
Pressure...Atmospheric
Electric conductivity...100µS/cm or more
Power Requirements : 100V AC 50/60Hz
Power Consumption : Approx. 25VA
Wetted Materials : SUS316, fluoro-rubber (FKM), Polypropylene (for HC-763 type)
Weight : 7kg (length; 1m)
Construction : Rainproof type (IP55)
Paint colour : Metallic silver and blue
Related Transmitter : Model HBM,HDM
Related Equipment : Mounting bracket... Models ZC-1 or ZC-2
Mounting flange (open flange) Models ZFK-1 or ZFK-2

Sample temperature range for typical electrode & holder combination

| Holder | Holder material | Integrated pH electrode | | Integrated ORP electrode |
|---|---|---|---|---|
| | | Model 5600 | Model 5601 | Model 260□ |
| HC-763 | polypro-pylene | -5 to 70˚C | -5 to 80˚C | -5 to 70˚C |
| HC-703C | PVC | -5 to 60˚C | — | - 5 to 60˚C |

### Configuration

(Typical configuration with Model HDM transmitter)

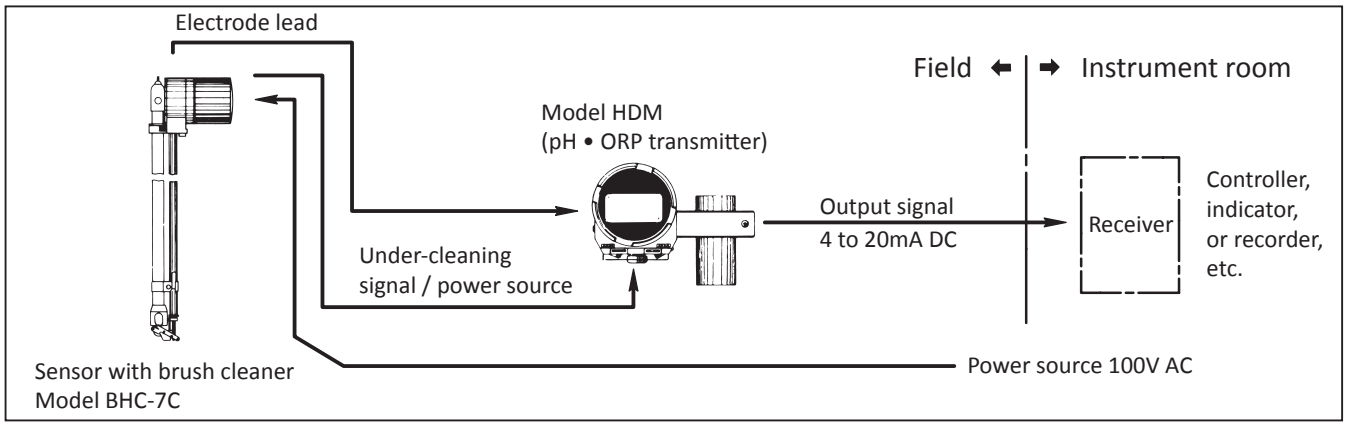

## System connection and flow

When relaying the electrode lead wire to the connector box

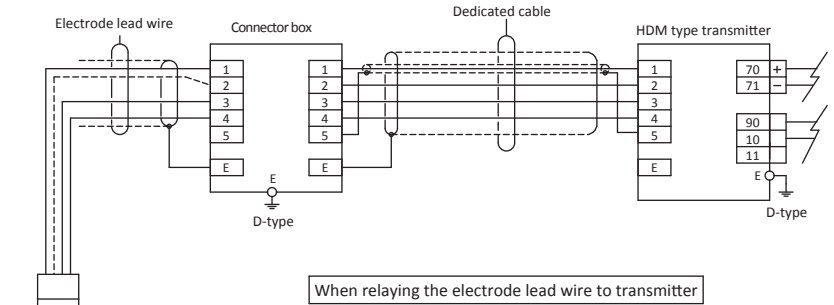


Description of the connection terminal  Connect as necessary

13,14 : Cleaning start signal input terminal
"Closed"time : Non - voltage "Closed"contact pulse of 100msec or more
Capacity : DC 30V, 0.1A or more

15,16 : Cleaning stop signal input terminal
Stop with "Open"(Short circuit at shipment)
Internal-load motor: AC 100V, 250mA

10,11,12 : Under cleaning signal 1 output terminal
"Closed"between #10 to #11 during cleaning
Capacity : AC 125V, 1A

17,18 : Under cleaning signal 2 output terminal
"Closed"between #17 to #18 durning cleaning
Capacity : AC 125V, 1A

When relaying the electrode lead wire to transmitter

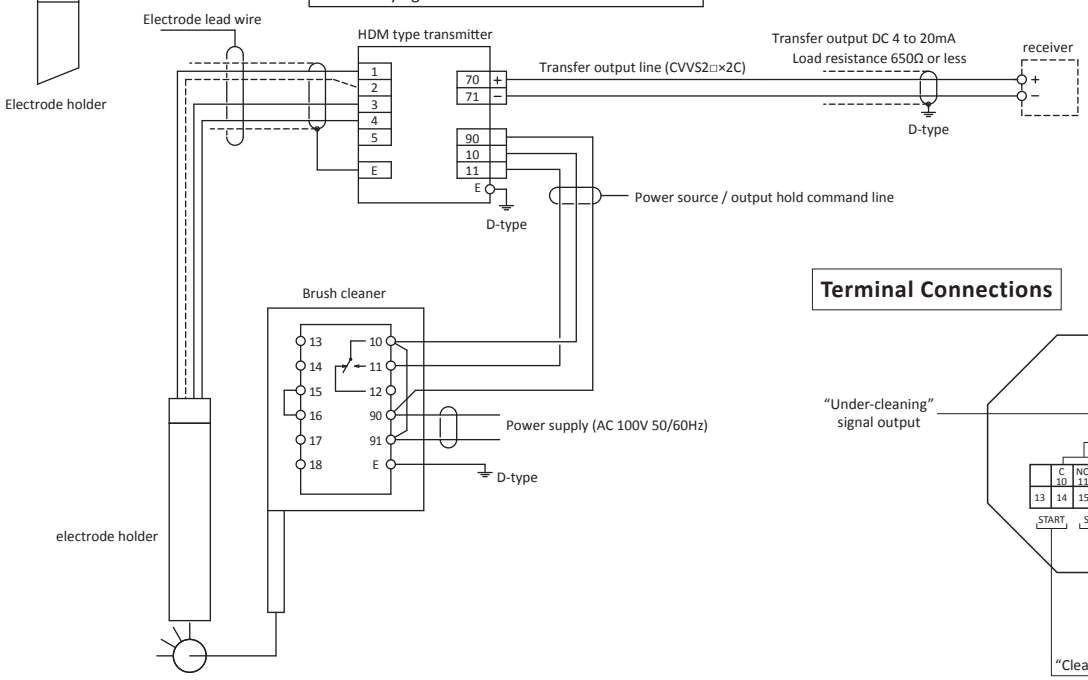


## Terminal Connections

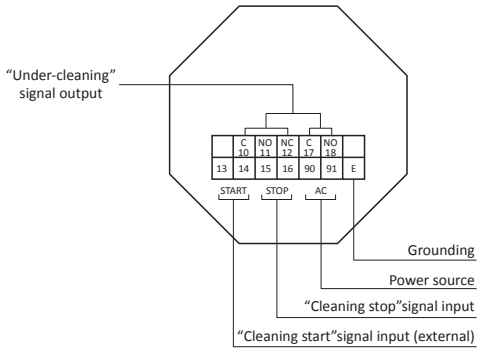


## Dimensions

Unit : mm

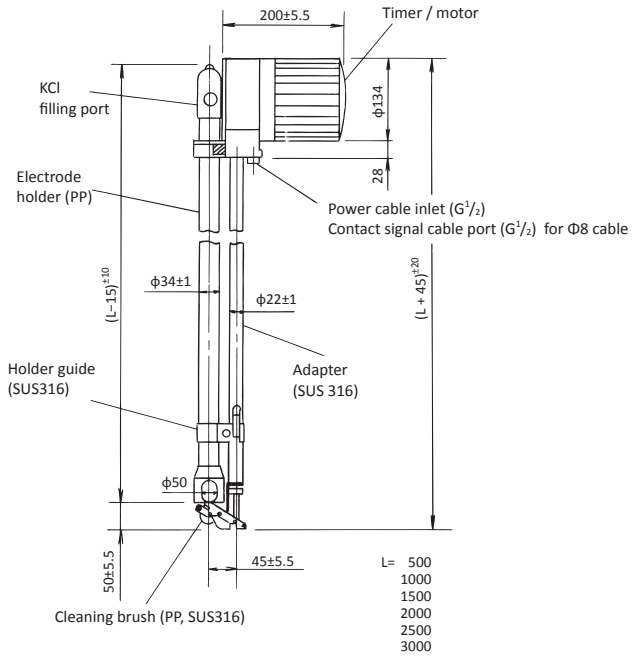


## Typical Installation

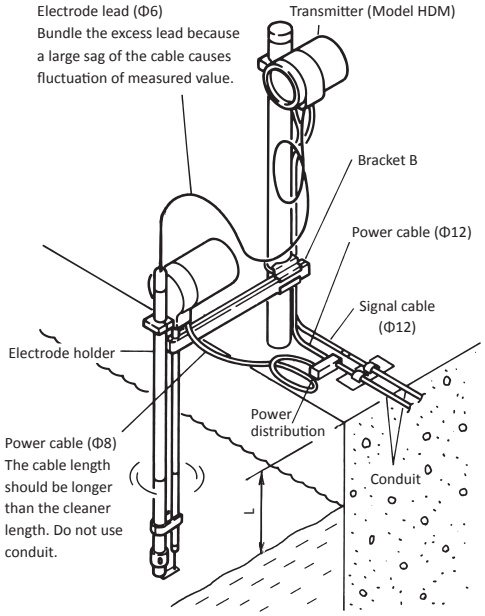


The required length of electrode holder is L + (500 to 1000)mm where L is the distance from the water surface

<Note>

To be able to draw up the cleaner for its functional check, bundle the power cable by a length equivalent to the total length of the cleaner.

**Product code**

BHC7C-2- □□□□□□□□□

Power source *1
- A ····· 100V AC 50/60

Materials of wetted parts in cleaner
- 1 ····· SUS316 (Standard)
- 2 ····· SUS316L

Combined holder (no separate order required)
- 0 ····· No holder
- 1 ····· Polypropylene holder : HC-763
- 2 ····· Clear PVC holder : HC-703C

Length of combined holder *2
- 1 ····· 0.5m ↑The sensor length depends on this holder
- 2 ····· 1.0m
- 3 ····· 1.5m
- 4 ····· 2.0m
- 5 ····· 2.5m
- 6 ····· 3.0m

Applicable electrode
- 0 ····· No electrode
- A ····· pH normal temperature — Model 5600
- B ····· pH high temperature — Model 5601
- 3 ····· ORP (Pt) general use — Model 2600★
- 4 ····· ORP (M) sewage/human waste — Model 2605★
- 8 ····· Others to be specified *3

Electrode lead length
- 0 ····· No electrode
- K ····· 5m (holder length max. 2m)
- M ····· 10m

Cleaning cycle
- 0 ····· 3 hours (0.1 to 3 hours) (standard)
- 1 ····· 12 hours (0.1 to 12 hours)

Markings
- 0 ····· Standard
- 1 ····· English

Examinant
- 0 ····· None
- 1 ····· Present (inspection mark affixed)
- 2 ····· Present (inspection mark and approval certification affixed)

★ Official approval not applicable

Custom spec. code;
Numeric digit: 9
Alphabet: Z

*1. For the line voltage of 100V AC or more, order a step-down transformer (Model ZP-30: 35VA, Separately installed)
*2. Max. length is 3m for PP holder, and 4m for clear PVC holder.
*3. Please contact us for mounting ex-Model 6462 or 5700.

# SPECIFICATION SHEET

TOA DKK

## IMMERSION TYPE SENSOR WITH WATER-JET CLEANER JHC-7C

○This detector has a flow-through type pH/ORP electrode holder with a water-jet cleaner.
○The sensing portion of the electrode is cleaned by water-jet spray intermittently.
○Control part and solenoid valve are integrated, so installation is simple. Maintenance work such as calibration with standard solution can be easily carried out by simply detaching the electrode holder.
○A built-in timer function for setting the cleaning cycle and time is provided for JHC-7C.
Output of the cleaning in progress signal to the converter eliminates disturbance of the control system.

### Standard Specifications

| | |
|---|---|
| Product Name | : Flow-through type detector with water jet cleaner |
| Model | : JHC-7C |
| Measurement Object | : pH/ORP |
| Installation Method | : Flow-through type |
| Cleaning Method | : lntermittent cleaning with water jet |
| Cleaning Cycle | : 0.1 to 3 hrs. (optionally up to 12 hrs.) |
| Water Jet Spraying Time | : 0 to 60 secs. (adjustable) |
| Under Cleaning Signal Delay Time | : 0 to 5min (adjustable) |
| Under Cleaning Signal Output Time | : 0 to 6min (water jet splashing time + extended time after cleaning) |
| Input/Output Signals | : Under Cleaning Signal Output 1a, 1c (2 systems)<br>Contact Capacity ... 125V AC 1A<br>Cleaning Start Input<br>Closing time ... 100ms or more, no-voltage closed contact pulse<br>Contact Capacity ... DC 30V 0.1A or more<br>Cleaning Stop Input<br>Cleaning stops when contacts open (normally short-circuited)<br>Contact rating...125V AC 3A or more |
| Ambient Temperature | : -5 to 50˚C (cleaning solution flow path, no freezing) |
| Sample Conditions | : Temperature ... -5 to 80˚C<br>(No freezing. Temp range limited by combination holders)<br>Pressure ... Atmospheric Pressure<br>Eelectric Conductivity ... 100µS/cm or more |
| Cleaning Water Conditions | : Temperature ... 5 to 80°C<br>Pressure ... 0.2 to 0.5MPa<br>Water quality ... Industrial water (equivalent to tap water)<br>Consumption ... Approx. 5 to 11L/min. |
| Power | : 100V AC 50/60Hz |
| Power consumption | : Approx. 25VA |
| Wetted Materials | : SUS316, PP / FKM |
| Weight | : Approx. 7kg |
| Structure | : Rainproof, (IP55) |
| Colour | : Metallic silver and blue |
| Combination | : HDM<br>: Bracket … ZC-1 type or ZC-2 type<br>Flange ... (Open flange) ZFK-1 type or ZFK-2 type |

Typical electrode & holder combination is as following page.

### Configuration

(Typical configuration with Model HDM transmitter)

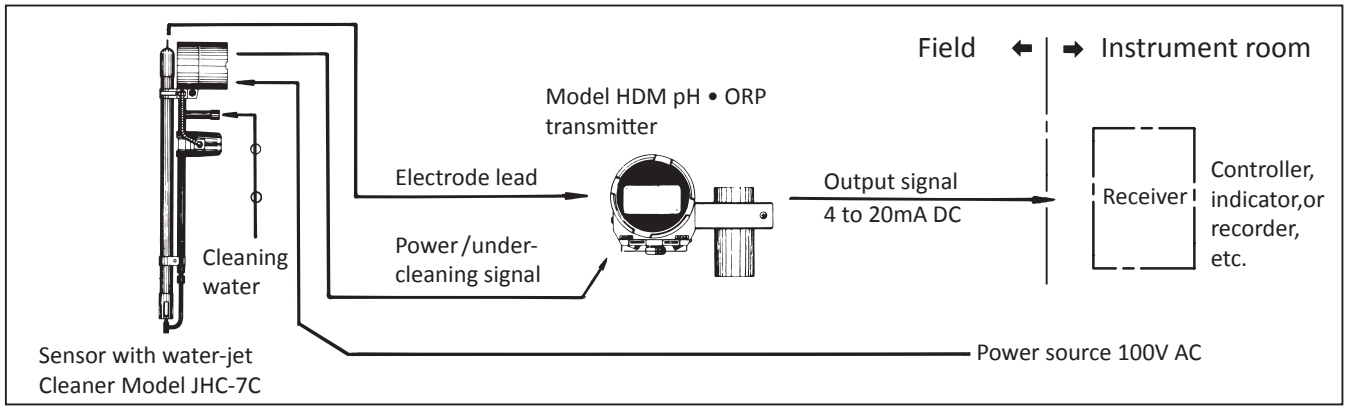

Sample temperature range for typical electrode & holder combination

| Holder | Holder material | Integrated pH electrode | | Integrated ORP electrode |
|---|---|---|---|---|
| | | Model 5600 | Model 5601 | Model 260□ |
| HC-763 | polypro-pylene | -5 to 70˚C | -5 to 80˚C | -5 to 70˚C |
| HC-703C | PVC | -5 to 60˚C | — | - 5 to 60˚C |

## System connection and flow

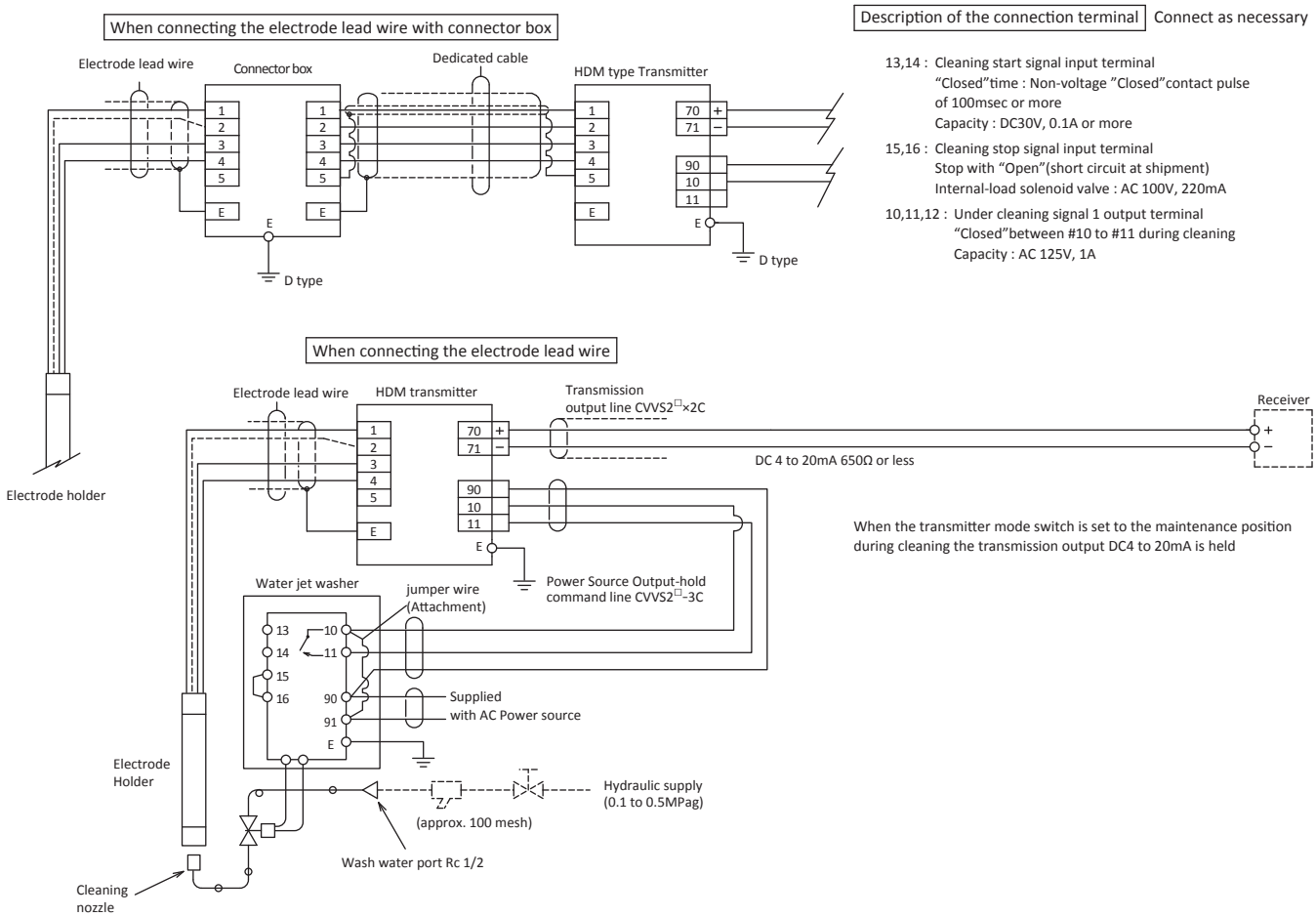

## Terminal Connections

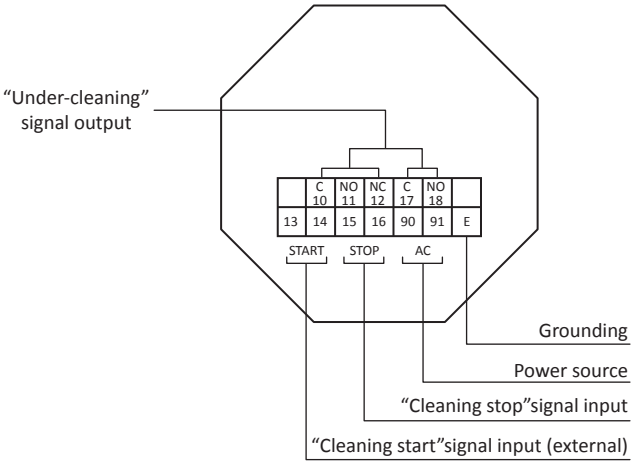


## Dimensions

Unit : mm

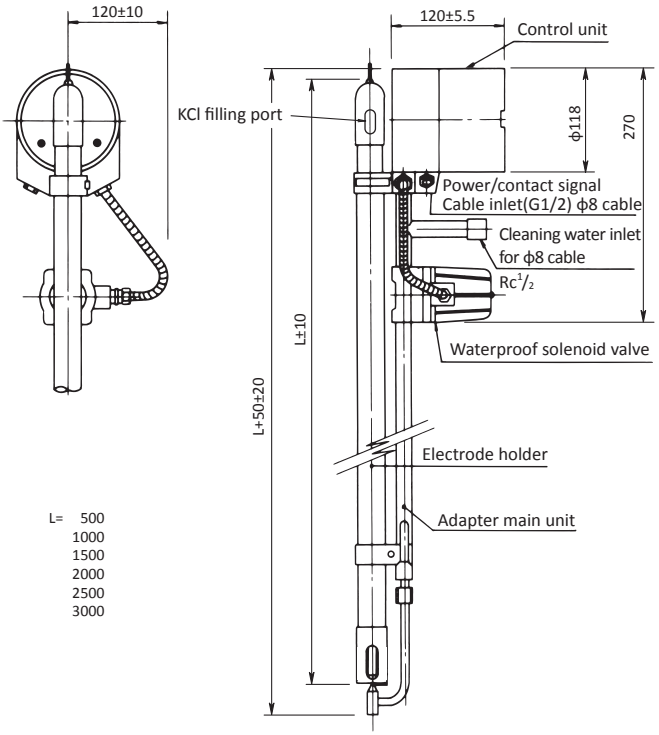


### Cleaning Water

- Industrial water is used as cleaning water. When using tap water, it is prohibited to supply it directly from the tap water. Use water pressurization equipment to isolate the analyzer from city water supply pipes.
- When freezing in winter is likely, thermal insulation of the pipe will be required.

* A higher pressure provides a better cleaning effect. A pressure above 0.2MPa is recommend.

## Product code

JHC7C-2-□□□□□□□□□□

- **Powersupply*1**
  - A: AC 100V 50/60Hz
- **Type of operation parts (timer and solenoid valve)**
  - A: Integrated type (standard)
  - B: Separated type*2
- **Wetted part material in cleaning part**
  - 1: SUS316 (standard)
  - 2: PP*3
  - 3: SUS316L
- **Holder to be combined (not necessary to order separately)*4**
  - 0: No holder
  - 1: Polypropylene holder : Model HC-763
  - 2: Clear PVC holder : Model HC-703C
- **Holder length*5**
  - 1: 0.5m ↑The sensor length depends on this holder
  - 2: 1.0m
  - 3: 1.5m
  - 4: 2.0m
  - 5: 2.5m
  - 6: 3.0m
- **Electrode to be combined**
  - 0: no electrode
  - A: pH general use, normal temperature Model 5600
  - B: pH high temperature Model 5601
  - 3: ORP (Pt) general use Model 2600★
  - 7: ORP (M) sewerage / waste water Model 2605★
  - 8: Custom. Spec *6
- **Electrode lead length**
  - 0: no electrode
  - K: 5m (holder length 2m or less)
  - M: 10m
- **Cleaning cycle**
  - 0: 0.1 to 3 H (standard)
  - 1: 0.1 to 12 H
- **Marking**
  - 0: Standard
  - 1: English
- **Examinant**
  - 0: None
  - 1: Present (inspection mark affixed)
  - 2: Present (inspection mark and approval certification affixed)

★ Official approval not applicable

Custom spec. code;
Numeric digit: 9
Alphabet: Z

*1. If electrode voltage is other than 100V, please order step down transmitter (ZP-30 type: 35VA). (Separately installed)

*2. For the operation part (timer part and solenoid valve) are separate type, the wash water tubing 5m between the solenoid valve and the detector is included.

*3. When the cleaning part is made of PP, it is limited to separate type, and the combination holder length is 2m max.

*4. For the holder for NOS-electrode (HC-N76), select "9: Special".

*5. The material PP is 3m and transparent PVC is 4m for the length of the combination holder. For demands that exceed 3m, a drop-in JHC-95C type with a NOS-electrode with good maintenance operability is recommended.

*6. Please let us know when incorporating ex-models 6462 or 5700. For NOS electrode (5910 type) select "9: Special.

## Typical Installation

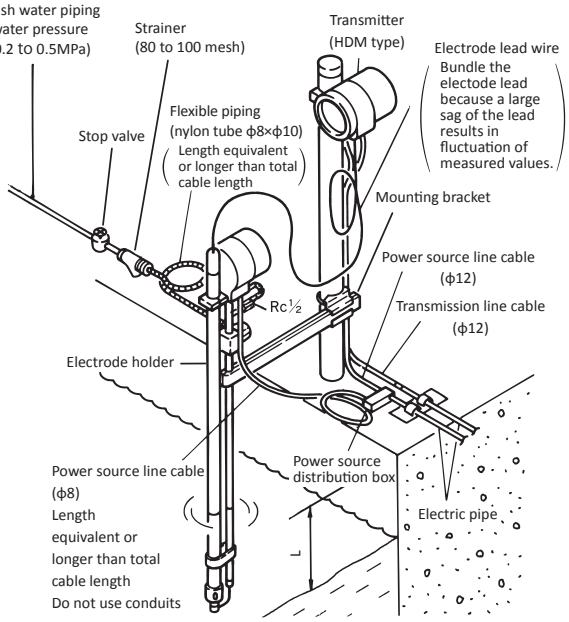


Length of electrode holder is L+ (500 to 1000), assuming that the distance to the water surface is L

<Caution>
As the washer must be pulled up for operation inspection, bundle the flush water flexible pipe and power source cable to the length equivalent to the total length of the washer as shown in the figure.

# SPECIFICATION SHEET

TOA DKK

## IMMERSION TYPE SENSOR WITH CHEMICAL CLEANER RHC-7C

○This sensor has an immersion type pH/ORP electrode holder combined with a chemical cleaner.
○A mixture of chemical solution and air is sprayed on to the sensor section of the electrode to dissolve and remove fouling build-up. This is especially excellent in removing crystalline scale made from hydroxide. The chemical solution used for cleaning is normally 5% hydrochloric acid.
○During cleaning, an air gap is formed around the sensing section of the electrode and this isolates the sensor tip from the sample. Thus, even a small quantity of chemical solution (approx.100mL) is sufficient for effective cleaning.
○Timer function (cleaning cycle or cleaning time) is equipped for the RHC-7C type. During cleaning, signal is output to a transmitter, preventing to disturb a control system.

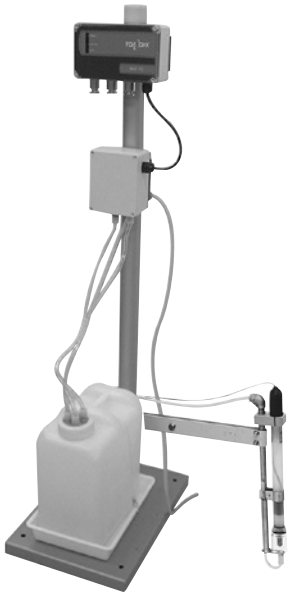

### Standard Specifications

| | |
|---|---|
| Product Name | : Immersion type sensor with chemical cleaner |
| Models | : RHC-7C |
| Measurement Object | : pH/ORP |
| Installation Method | : Timer / chemical feed unit; 50A pipe or wall mount.<br>Sensor; Fixture or flange mount |
| Cleaning Method | : Cyclic cleaning with reagent solution spray combined with air-gap. |
| Chemical Solution | : Hydrochloric acid, nitric acid |
| Solution consumption | : 100ml / cleaning |
| Cleaning cylcle | : 0.1 to 12h |
| Spraying Duration | : 0 to 60s |
| Extended Time after Spraying | : 0 to 5min |
| Under Cleaning Signal Duration | : 0 to 6min |
| Input / Output Signal | : Washing in progress signal output 1c 2 systems Contact; 125V 1A External wash start input signal<br>Closing time 100ms or more, no-voltage closed contact pulse<br>Contact capacity; DC 30V 0.1A or more<br>Wash stop signal input<br>Stops when open (normally short-circuited)<br>Contact capacity; 125V AC 3A or higher |
| Ambient Temperature | : -5 to 50°C (Cleaner channel, do not freeze) |
| Sample Conditions | : -5 to 80°C (Do not freeze, The range depends on combined holder.)<br>Pressure...Atmospheric<br>Conductivity...100μS/cm or more |

### Configuration

(Typical configuration with Model HDM transmitter)

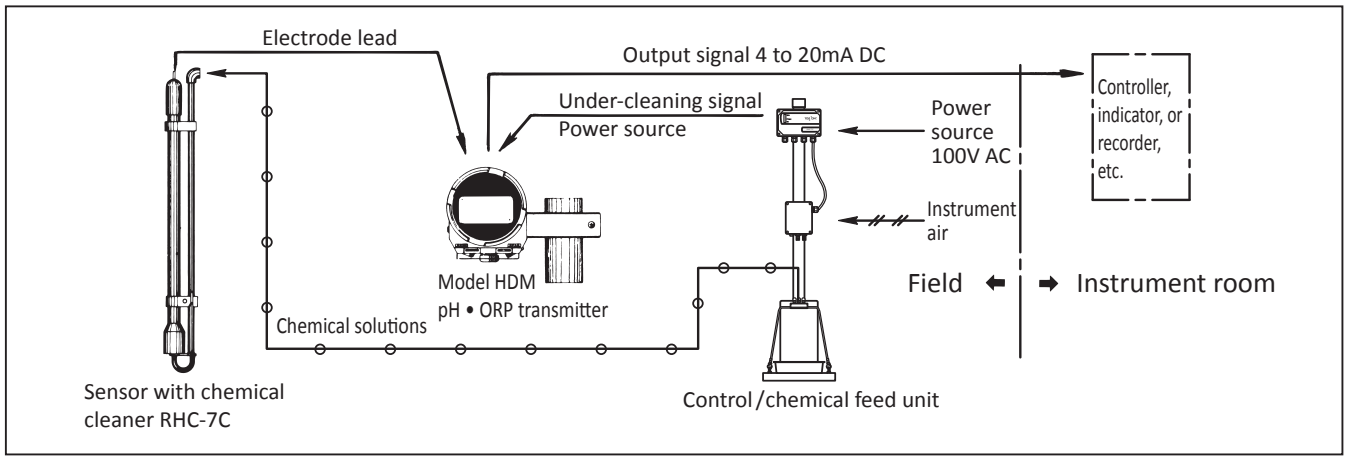

| | |
|---|---|
| Chemical used | : Type... 5 to 15% hydrochloric acid or nitric acid |
| Quantity used | : Amount... Approx. 100mL/1 time (The effective capacity of the tank is approximately 18L.) |
| Supply Air | : Quality... Equivalent to instrumented air<br>Pressure...0.05 to 0.1MPa<br>Consumption...15 to 20NL/min |
| Power Source | : 100V AV 50/60 Hz |
| Power Consumption | : Approx.25VA |
| Length of Sensor Section | : 0.5m, 1.0m, 1.5m, 2.0m, 2.5m or 3.0m (to be specified ) |
| Wetted Materials | : SUS316, Polypropylene, FKM, softPVC, PPS. |
| Weight | : Sensor... approx.3kg (holder length; 1m)<br>Control part and chemical feed unit... approx.9kg (Pole stand is not included.) |
| Construction | : Rainproof type (IP54)<br>(Note) Pole stand on the picture is optional.<br>Fixtures for a sensor is also ordered separately. |
| Combination Transmitter | : Model HDM transmitter |
| Combination Equipment | : · Sensor bracket... Model ZC-1<br>Length of sensor unit: 0.5 to 2.0m, type A or B.<br>for 2.0m or longer is type C<br>· Sensor bracket... (Stainless steel)...<br>Model ZC-2 (max. sensor length 2m)<br>· Mounting flange (open frange)<br>Model ZFK-1<br>100A JIS 10K FF, PVC<br>Model ZFK-2<br>100A JIS 10K FF, SUS316 |

Sample temperature range for typical electrode & holder combination

| Holder | Holder material | Integrated pH electrode | | Integrated ORP electrode |
|---|---|---|---|---|
| | | Model 5600 | Model 5601 | Model 260□ |
| HC-763 | polypro-pylene | -5 to 70˚C | -5 to 80˚C | -5 to 70˚C |
| HC-703C | PVC | -5 to 60˚C | — | - 5 to 60˚C |

## Options

· Pole stand

A 50 A stand with base on which timer/liquid feed unit and a tank can be mounted.

· Pressure regulator for instrument air

Regulator with a low pressure filter and 0.3MPa pressure gauge. This is installed on the liquid feed unit and is used to set the chemical solution transfer pressure at 0.1MPa.

· Air pump unit

When instrument air is not available, this unit should be added to the system. A pump with a capacity sufficient for chemical feed is housed in a rainproof case and is mounted on a 50A pipe.

## System connection and flow

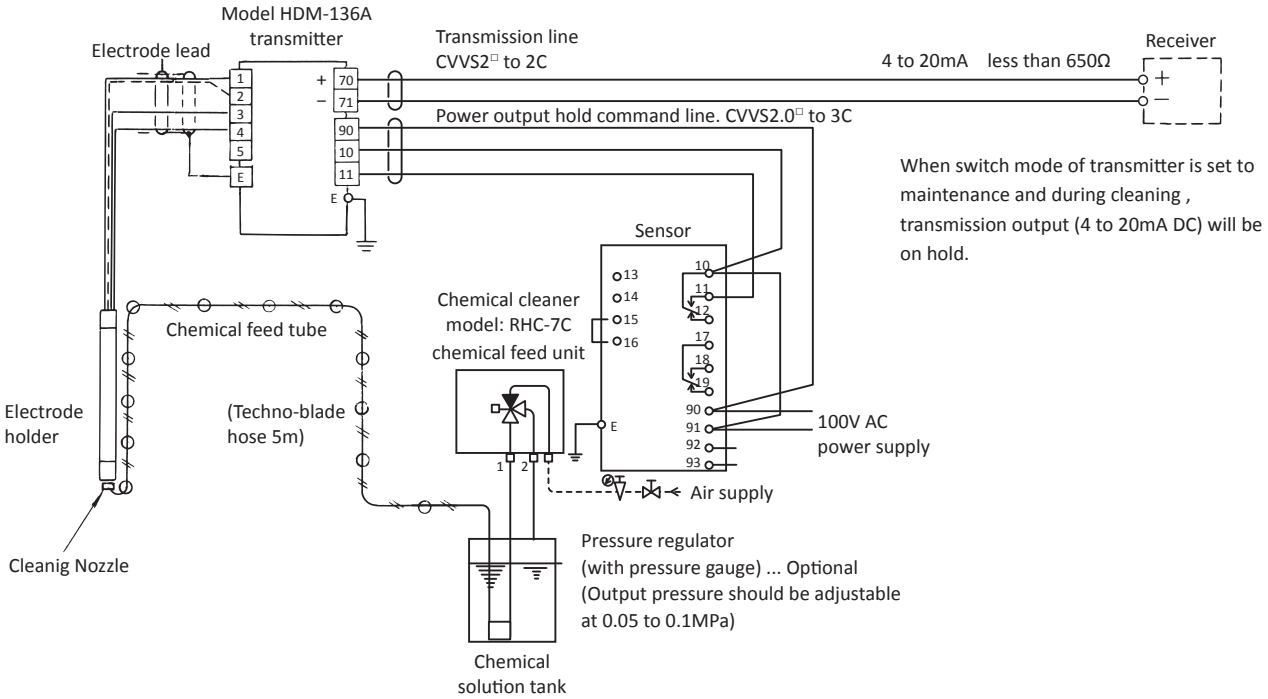


Description of the connection terminal  Connect as necessary

13, 14 Cleaning start signal input terminals
(Contact closure time / greater than 100ms)
(Contact rating : 30VDC 0.1A or more)

15, 16 Cleaning stop signal input terminals
(Stops when open. (Short-circuit when shipped.))
(Contact rating : 125VAC 3A or more)

92, 93 Power source for service (100VAC, 3A)

10, 11, 12 Under cleaning signal output terminal 1

17, 18, 19 Under cleaning signal output terminal 2

## Control Unit Layout

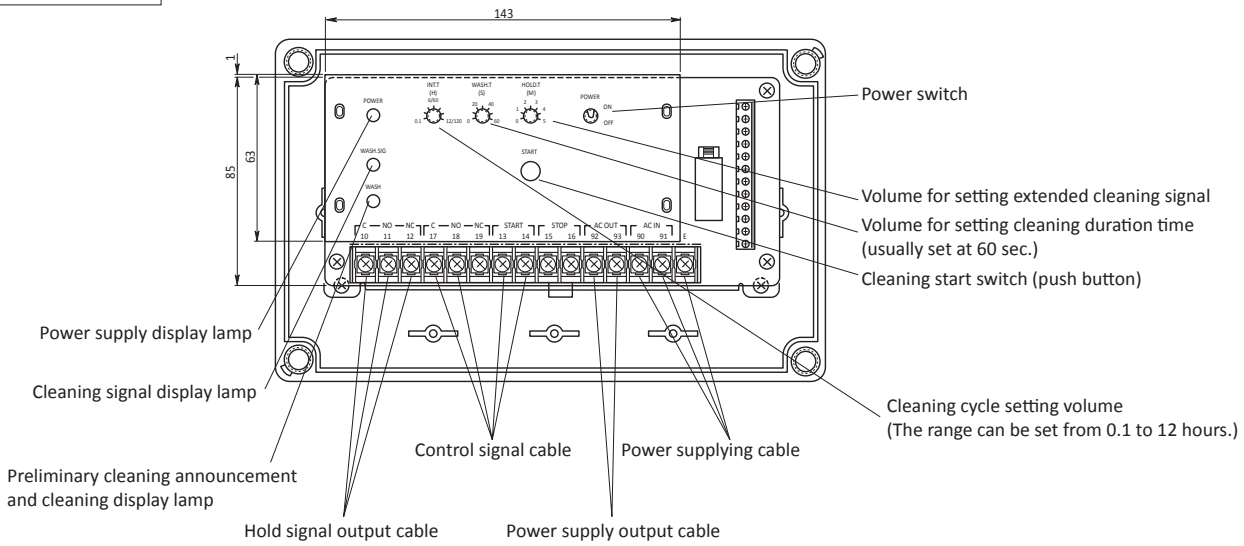


| | | |
|---|---|---|
| 10 | C | Under-cleaning signal 1 output terminals |
| 11 | NO | |
| 12 | NC | |
| 17 | C | Under cleaning signal 2 output terminals |
| 18 | NO | |
| 19 | NC | |
| 13 | | Cleaning start input terminals (input a closed contact signal of 100mS or more) |
| 14 | | |
| 15 | | Cleaning stop signal input terminals (Stop at open position. Contact rating, 125 VAC 1A or more) |
| 16 | | |
| 92 | | Service Power terminals (Usable as a power supply for related equipments. Independent from power supply switch. 3A fuse is supplied.) |
| 93 | | |
| 90 | | Power supply terminals |
| 91 | | |
| E | | Grounding terminal |

Time chart during operation is as follows.

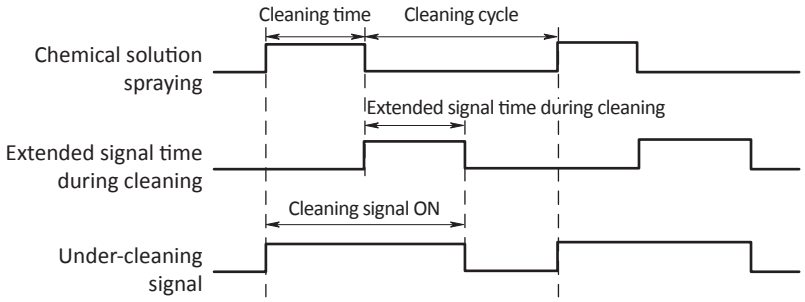

**Dimensions** Unit : mm

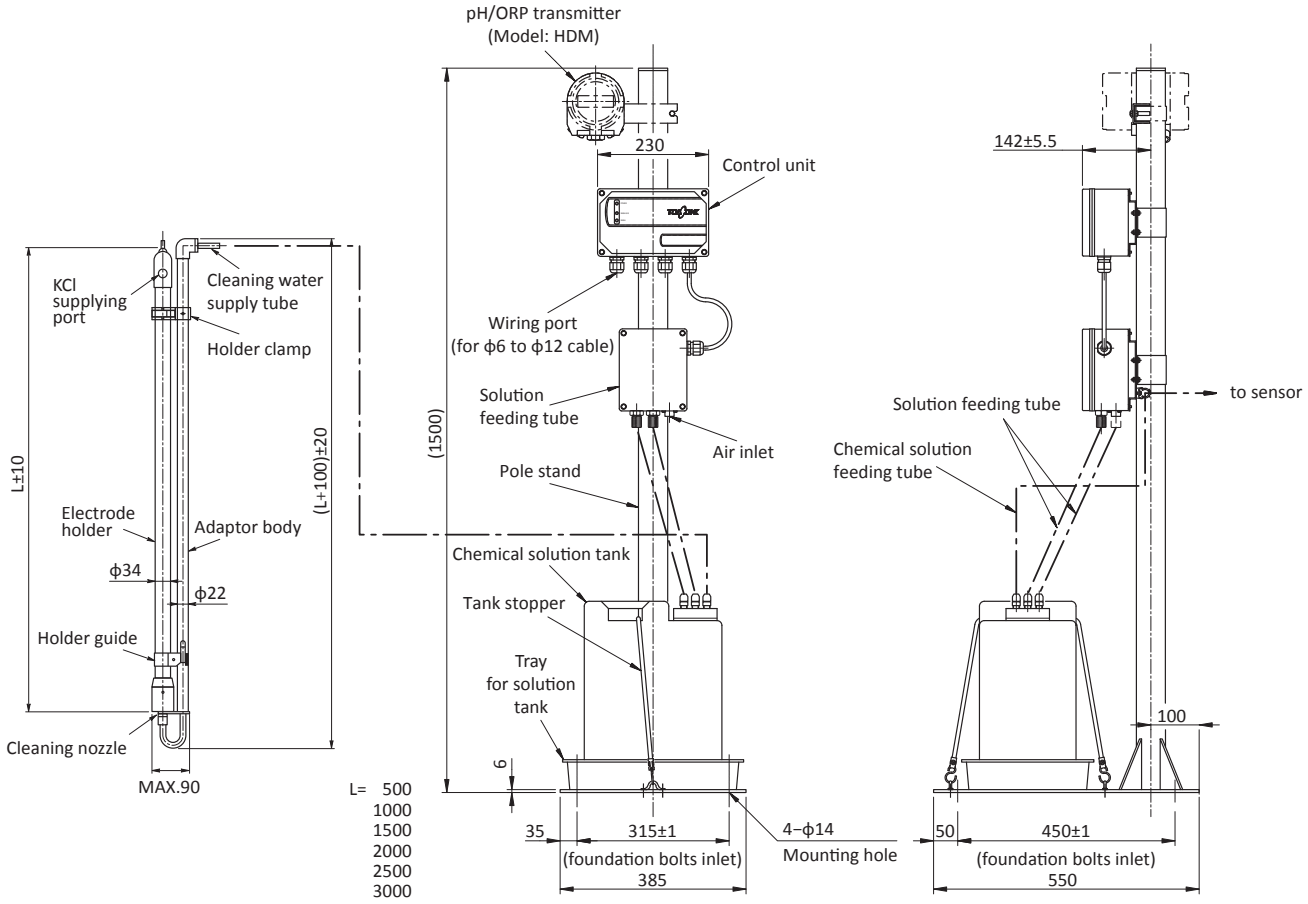

**Product code**

RHC7C-2-□□□□□□□□□□□□□□

**Power supply *1**
- A: 100V AC 50/60Hz

**Wetted part material in cleaning part**
- 1: Major parts SUS316S.S.(only nozzle : polypropylene)
- 2: All polypropylene *2
- 3: Major parts SUS316,(only nozzle : polypropylene)

**Holder to be combined (not necessary to order separately)**
- 0: No holder
- 1: Polypropylene holder : Model HC-763
- 2: Clear PVC holder : Model HC-703C

**Holder length *3**
- 1: 0.5m ↑The sensor length depends on this holder
- 2: 1.0m
- 3: 1.5m
- 4: 2.0m
- 5: 2.5m
- 6: 3.0m

**Electrode to be combined**
- 0: no electrode
- 1: pH general use, normal temperature, model 5600
- 2: pH high temperature, model 5601
- 5: ORP(Pt) general use model 2600★
- 6: ORP(M) sewerage / waste water model 2605★
- 8: Custom. Spec *4

**Electrode lead length**
- 0: no electrode
- K: 5m (holder length 2m or less)
- M: 10m

**Cleaning cycle**
- 0: 0.1 to 12H (standard)
- 1: 0.1 to 120H

**Chemical solution tank capacity**
- 1: 20L (standard)
- 2: 50L

**Air supply**
- 0: External supply : no pressure regulator (Instrument air and regulator are to be supplied by customer.)
- 1: External supply : with filter / regulator (Instrument air and regulator are to be supplied by customer.)
- 2: With air pump unit

**Dedicated pole stand**
- 0: none
- 1: Equipped *5

**Installation site *6**
- A: Indoor (not under sunlight)
- B: Outdoor (Equipped with chemical solution tank (20L) with sunshade)
- C: Outdoor (Equipped with chemical solution tank (50L) with sunshade)

**Arrester *7**
- 0: None
- 1: Equipped

**Marking**
- 1: Standard
- 2: English

**Official approval**
- 0: None
- 1: with the certification
- 2: with the certification and official approval

★ Official approval not applicable

Custom spec. code;
Numeric digit: 9
Alphabet: Z

*1. When power supply is 100V or more, please order a step-down transformer ZP-30 type, (normally 35VA, 140VA when air pump unit is equipped).
*2. When all of wetted part materials in cleaning unit are made of PP, max holder length is 2m.
*3. Holder length is up to 3m (PP), 4m (clear-PVC).
*4. For installation to ex-models, 6462 or 5700, please notice us.
*5. Dedicated pole stand is different from model : B-150 (Code No. 67904600).
*6. When installed outdoor, sunshade is necessary to prevent the deterioration of chemical solution tank by ultraviolet light (sun light).
*7. Ceramic surge arrester (easy type) is attached to power supply line.

## Typical Installation

**<Example of standard installation>**

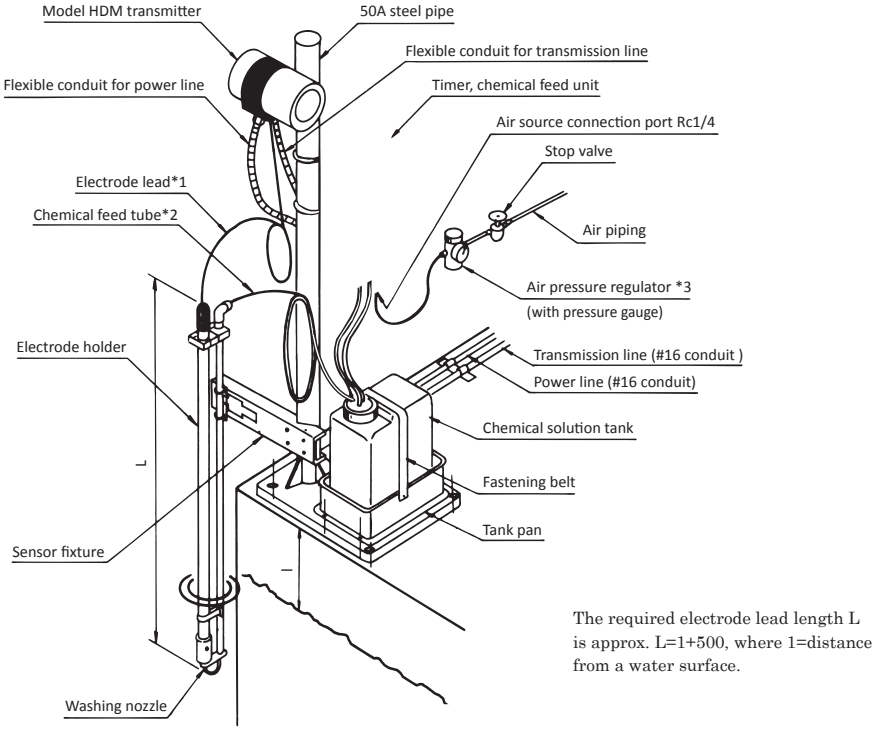


*1. Bundle the electrode lead because a large sag of the lead results in fluctuation of measured values.
*2. The standard length of chemical feed tube is 5m. Do not cut the tube but bundle it. If cut, the chemical feed may not work efficiently for cleaning.
*3. Use air pressure regulator capable of setting 0.06 to 0.1Mpa. Install a filter and a drain trap when the supplied air contains dust or mist.

# SPECIFICATION SHEET

TOA DKK

## IMMERSION TYPE DETECTOR WITH PULSE AIR JET CLEANER PHC-7D

This detector combines immersion type pH/ORP Electrode Holder and a pulsed air jet cleaner as a single unit.

○The pulse air jet cleaner periodically discharges compressed air intermittently to the sensitive part of electrode part in the sample water.
The high-speed water flow generated when compressed air expands rapidly in the sample water effectively removes and cleans dirt adhering to the electrode sensitive part. This high-speed water flow contains a large amount of bubbles, that hits the electrode sensitive part randomly. This removes and cleans out the crystalline scale such as hydroxide by peeling them off by the water flow.

○Has high cleaning effect against fouls produced by organic substances and traces in wastewater treatment facilities and sewage treatment plants which reduces maintenance work to keep electrodes clean.

○Use general-purpose air in the plant for compressed air. Air pumps can be built in if there is no supply facility, so the system can be self-contained.

○Cleaning timer is built in for combination of HDM type transducers without cleaning function.


### Standard Specifications

| | |
|---|---|
| Product name | : Immersion Type Detector with Pulse Air-Jet Cleaner |
| Model | : PHC-7D |
| Measurement object | : pH or ORP of solution |
| Cleaning Method | : Intermittent cleaning by high-speed water flow caused by expansion during discharge of compressed air |
| Combination electrode | : pH electrode … 5600/5601<br>ORP electrode … 2600/2605 |
| Supply Air | : Plant general -purpose air<br>Dust-removing Oil (air filter) |
| | Connection ... Rc 1/4<br>Pressure ... 0.1 to 0.3MPa<br>Consumption ... Approx. 0.6L (per pulse) |
| Supplied power | : AC 100V±10% 50/60Hz |
| Power consumption | : Approx. 20VA<br>Approx. 150VA for models with air pump |
| Ambient temperature and humidity | : -5 to 50°C 95%RH or less |
| Sample conditions | : Temperature ... -5 to 60°C<br>Pressure …atmospheric pressure<br>Electric conductivity ... 100μS/cm or more |
| Wetted main material | : PVC, SUS316, PP |
| Control unit | : Protective structure ... IP54<br>Wiring port ... φ6 to 12 cable gland for 3 pieces<br>Weight ... approx.15kg (with air pump) |
| Detector weight | : Approx 4kg (1m long) |
| Cleaning timer (Option) | : Required for combination with a transmitter other than HBM-16□B type and with an air pump. |

Cleaning cycle; 0.1 to 99.9 hours (0.5 hours when shipped)
Number of air pulses; 1 to 19 times (once when shipped)
Wait time after cleaning; 0.0 to 99.9 minutes (0.5 minutes at shipment)

### Configuration

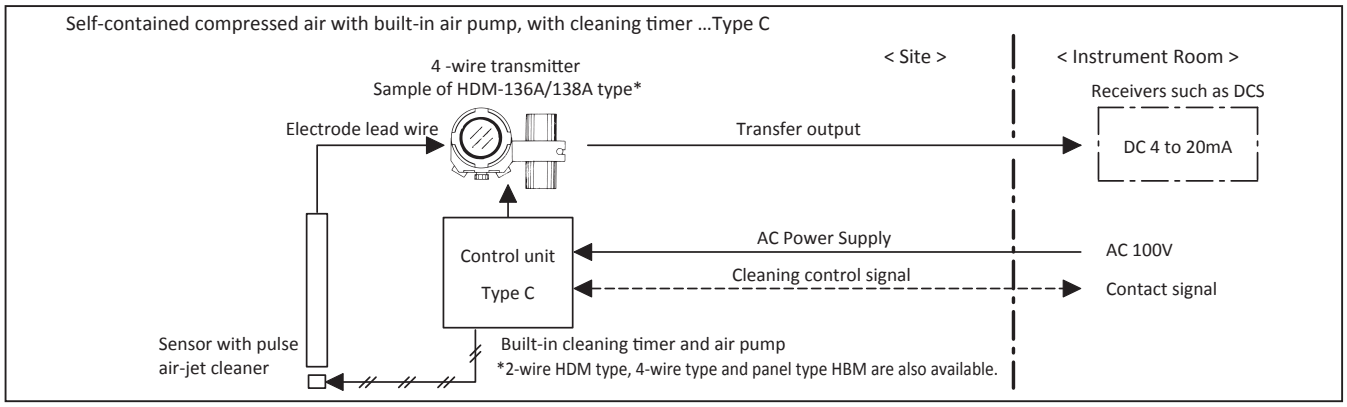

## Flow

●Type A : Without air pump or cleaning timer

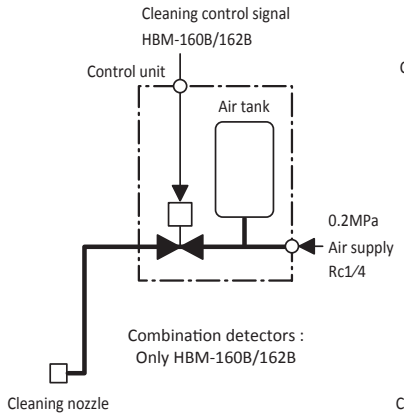


●Type B : With cleaning timer Without air pump

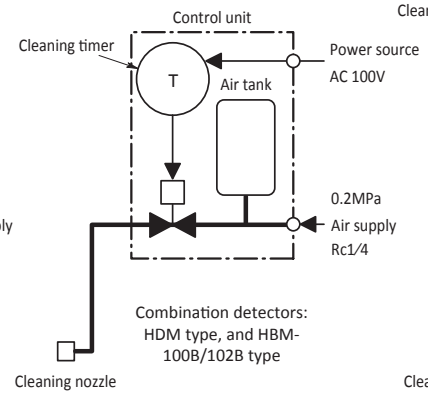


●Type C : With cleaning timer and air pump

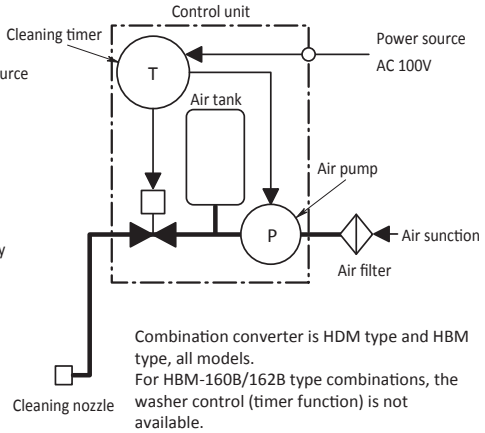


Combination converter is HDM type and HBM type, all models.
For HBM-160B/162B type combinations, the washer control (timer function) is not available.
To control the air pump of the cleaner using the built-in cleaning timer.

## Time chart

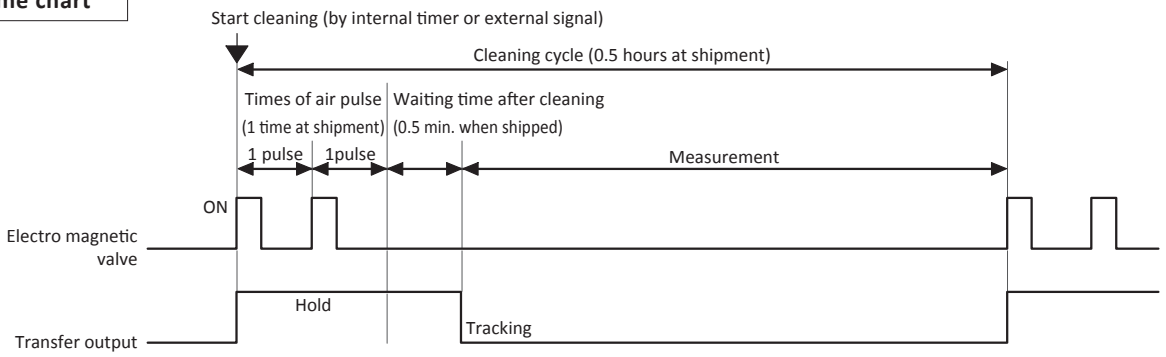


## Dimensions

Unit : mm

● Control unit (Type A / B)

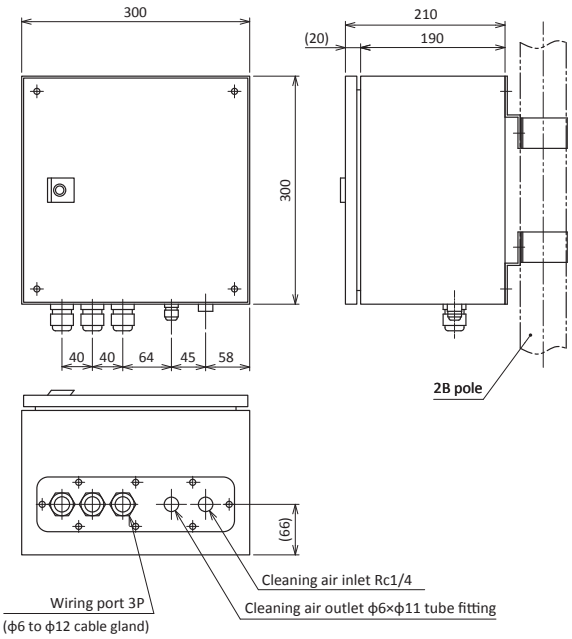


● Detector (control unit : Type C)

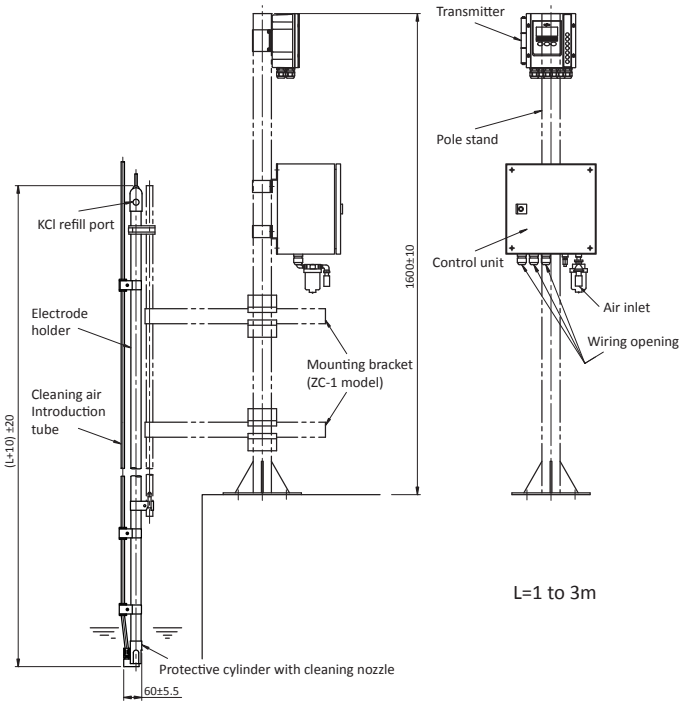

## Connection of cleaning timer

Type B/C connection sample with HDM-136A type detector

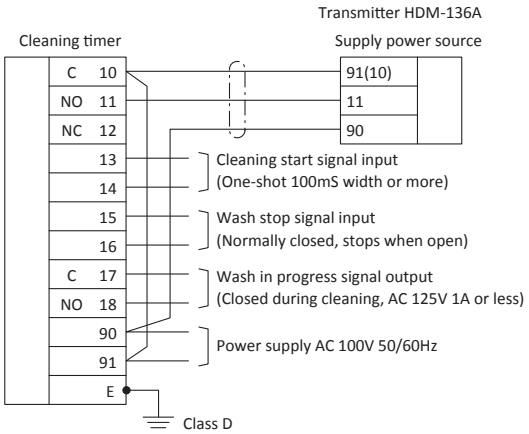


## Product code

PHC7D-0-□□□□□□□□□□□

- **Compressed air supply method *1**
  - 1 ····· Type A ····· External supply
  - 2 ····· Type A ····· External supply / Pressure regulator built-in filter
  - 3 ····· Type B ····· External supply / cleaning timer built-in
  - 4 ····· Type B ····· External supply / cleaning timer built-in/ Pressure regulator
  - 5 ····· Type C ····· Self-contained air pump built-in / cleaning timer built-in
- **Power supply voltage**
  - A ····· AC 100V 50/60Hz
  - B ····· 50/60Hz specified at AC 110 to 120V *2
  - C ····· 50/60Hz specified at AC 200 to 240V *2
- **Combination holder**
  - A ····· Transparent PVC (HC-703C type, sample temperature max 60°C)
  - B ····· PP (HC-763 type, sample temperature max 80°C)
- **Length of combination holder**
  - 1 ····· 1.0m
  - 2 ····· 1.5m
  - 3 ····· 2.0m
  - 4 ····· 2.5m
  - 5 ····· 3.0m
- **Incorporated electrode**
  - 0 ····· Not required
  - A ····· pH General normal temperature 5600 type
  - B ····· pH General high temperature 5601 type
  - 1 ····· ORP (Pt) For general use 2600 type★
  - 2 ····· ORP (M) For sewage and human waste 2605 type★
- **Length of the electrode lead wire**
  - 0 ····· When built-in electrode is not required
  - K ····· 5m (holder length 2m or less)
  - M ····· 10m
- **Hood (shading of operation parts)**
  - 0 ····· None
  - 1 ····· Equipped
- **Built-in arrester**
  - 0 ····· None
  - 1 ····· Equipped *3
- **Holder guide assay**
  - 0 ····· None (use mounting bracket ZC-2 type for holder length 1.5m or less,)
  - 1 ····· Equipped (combine ZN-7 type support bracket with holder)
- **Marking**
  - A ····· Standard
  - B ····· English
- **Examinant**
  - 0 ····· None
  - 1 ····· with the certification
  - 2 ····· with the certification and official approval

★ Official approval not applicable

Custom spec. code;
Numeric digit: 9
Alphabet: Z

*1. The combination changer differs depending on the compressed-air supply method (TypeA/B/C).

| | |
|---|---|
| Type A | HBM-160B/162B |
| Type B | HDM-135A/136A/137A/138A, HBM-100B/102B |
| Type C | HBM-160B/162B, HDM-135A/136A/137A/138A, HBM-100B/102B |

*2. Specify from AC 110V / 115V / 120V, or AC 200V / 220V / 230V / 240V. (AC 100V step-down transformer is built into the control unit.)

*3. For Type B/C (with built-in clean timer), attach the ceramic surge arrester to Power Source line.

NOTE: If a mounting device is required, a pole-stand ZB-1 type or the mounting brackets shown below must be ordered separately.

Mounting bracket: Holder length 1. ZC-2 up to 5m

For holder length 2m or longer, combine ZC-1 and C type with support bracket ZN-7 type

## ■ Mounting bracket for detector with cleaner

| Model | Spec | Mounting image |
|---|---|---|
| ZC-1<br>A | For fixing anchor bolts<br><br>Bracket length: 600mm<br>Material: SS41 (steel)<br>Coat: Munsell N7<br>Acid proof base | Can be fixed on detectors with cleaner up to 1.5m in overall length.<br> 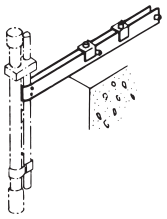 <br> 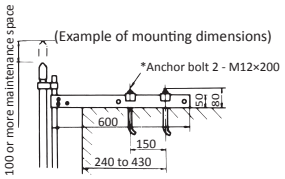 <br>*Anchor bolts and nuts are not included |
| ZC-1<br>B | For fixing pole (50A)<br><br>Bracket length: 600mm<br>Material: SS41 (steel)<br>Coat: Munsell N7<br>Acid proof base | Can be fixed on detectors with cleaner up to 1.5m in overall length.<br> 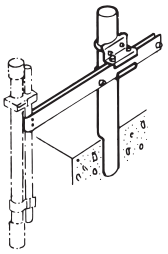 <br> 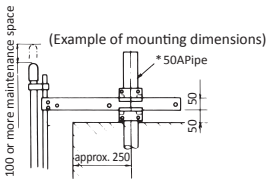 <br>*50A pipe is not included |
| ZC-1<br>C | For fixing pole (50A) for deep tank<br><br>Bracket length: 600mm<br>X2<br>Material: SS41 (steel)<br>Coat: Munsell N7<br>Acid proof base | Can be fixed on detectors with cleaner from 2.0m to 4.0m in overall length.<br> 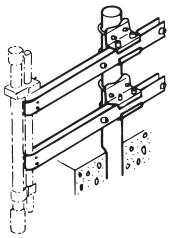 <br> 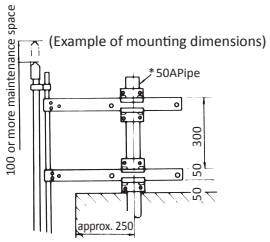 <br>*50A is not included |
| ZC–2 | Can be fixed either with anchor bolts or 50A poles. Detachable with one touch per washer.<br><br>Bracket length: 500mm<br>Material: SUS304<br><br>Detectors with cleaning up to the full length of 2.0m can be fixed. | 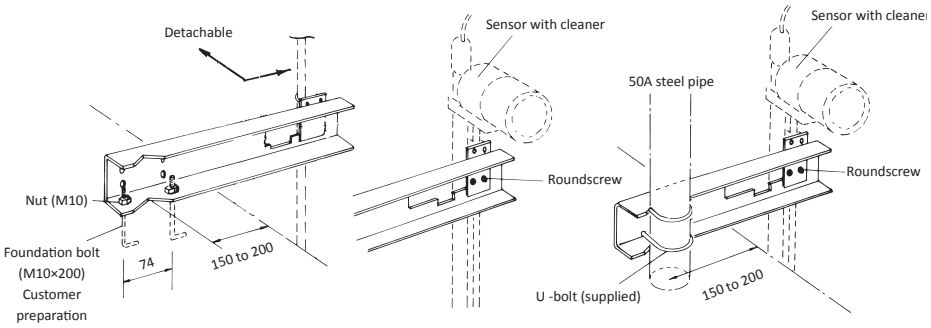 <br><Installation with anchor bolts> <Mounting on a pole stand> |

## ■ Detector mounting flange with cleaning (open flange)

| Model | Spec | Mounting image | |
|---|---|---|---|
| ZFK-1 | Resin (hard PVC or PP)<br>flange size: 100A to 300A<br>JIS 10K or 5K FF<br>Rubber cover (odor proof packing) for flange opening is optional. | Can be fixed on detectors with cleaner up to 1.5m in overall length.<br>Cannot be used for BJHC, BRHC, & PHC-7D | 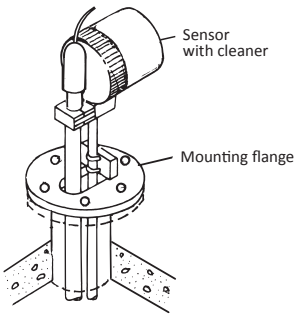 |
| ZFK-2 | Metallic (SUS304 or SUS316)<br>flanges: 100A to 300A JIS 10K or 5KRF<br>Rubber cover (odor proof packing) for flange opening is optional.<br>Note:<br>The flange size should be 125A (5("B)) or more to facilitate removal of the holder. | Can be fixed on detectors with cleaner from 2.0m to 4.0m in overall length.<br>Cannot be used for BJHC, BRHC, & PHC-7D | |

**Product code**

ZC1-1-□□□

- Types
  - A: A (fixed to anchor bolts)
  - B: B (fixed to 50 A pipes)
  - C: C (fixed to 50 A pipes)
- Bracket materials
  - 1: Iron (Typical)
  - 2: SUS304 (Types A & B)
  - 3: SUS304 (Type C) Special
  - 9: Special
- Coating
  - 0: None
  - 1: Munsell N7, acid resistant substrate (standard)
  - 9: Special

ZC2-0-□□□□

- Mounting method
  - A: Fixed on anchor bolt
  - B: Fixed on 50A pipe
  - Z: Special
- Type of mounting holder
  - 1: For 1 holder
  - 2: For holder with cleaner
  - 3: For 2 holders
  - 4: For 1 holder and a holder with cleaner
  - 9: Special
- Material
  - 1: SUS304 (Standard)
  - 9: Special
- Coating
  - 0: None (standard)
  - 9: Special

ZFK1-1-□□□□□

- Material (flange)
  - 1: Hard PVC (standard)
  - 2: Polypropylene
  - 9: Special
- Size (nominal diameter) *
  - A: 100 (A) (Standard)
  - B: 125 (A)
  - C: 150 (A)
  - D: 200 (A)
  - E: 250 (A)
  - F: 300 (A)
  - G: 4″ (B)
  - H: 5″ (B)
  - J: 6″ (B)
  - K: 8″ (B)
  - L: 10″ (B)
  - Z: Special
- Specification (nominal pressure)
  - 1: JIS 5K
  - 2: JIS10K (Standard)
  - 3: ANSI 150LB
  - 4: JPI 150LB
  - 9: Special
- Shape of flange surface
  - 1: FF (typical)
  - 2: RF
  - 9: Special
- Opening cover (deodorizing packing)
  - 0: None (Standard)
  - 1: Exists
  - 9: Special

*For JIS standards, select from A to F to ANSI, and for JPI standards, select from G to L.

ZFK2-1-□□□□□

- Material
  - 1: SUS316 (standard)
  - 2: SUS316L
  - 3: SUS304
  - 9: Special
- Size (nominal diameter) *
  - A: 100 (A) (standard)
  - B: 125 (A)
  - C: 150 (A)
  - D: 200 (A)
  - E: 250 (A)
  - F: 300 (A)
  - G: 4″ (B)
  - H: 5″ (B)
  - J: 6″ (B)
  - K: 8″ (B)
  - L: 10″ (B)
  - Z: Special
- Specification (nominal pressure)
  - 1: JIS 5K
  - 2: JIS10K (Standard)
  - 3: ANSI 150LB
  - 4: JPI 150LB
  - 9: Special
- Shape of flange surface
  - 1: FF (standard)
  - 2: RF
  - 9: Special
- Opening cover (deodorizing packing)
  - 0: None (Standard)
  - 1: Exist
  - 9: Special

*For JIS standards, select from A to F to ANSI, and for JPI standards, select from G to L.

# ■ Auxiliary equipment for detector with cleaning

● Voltage Conversion Unit

This step-down transformer is required when Power Source voltage supplied to the detector with cleaning is equal to or greater than AC100V.

| | |
|---|---|
| Model | : ZP-30 (field installation type) |
| Primary Voltage | : AC 240 / 220 / 200 / 120 / 115 / 110V |
| Secondary Voltage | : AC 100V |
| Volume | : 35VA or140VA (need to specify) |
| Wiring opening | : Two Glands for φ6 to φ12 cables |
| Case material / structures | : Polycarbonate / IP65 |
| Mounting method | : 50A pole mounting |

● Pole stand

This pole stand is used to mount the immersion type sensor with cleaner to the tank wall together with the transmitter.

| | |
|---|---|
| Model | : ZB-1 |
| Material | : 50A steel pipe (SGP) or SUS304 |
| Coat color | : Metallic silver<br>No coating for SUS304 |
| Length | : 1.0 m or 1.6m |

**Dimensions** Unit : mm

ZP-30

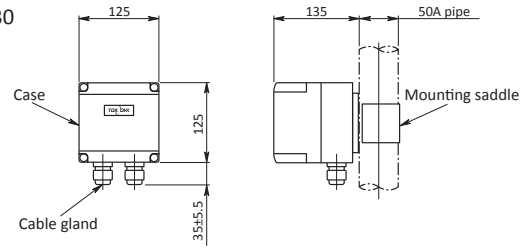


ZB-1

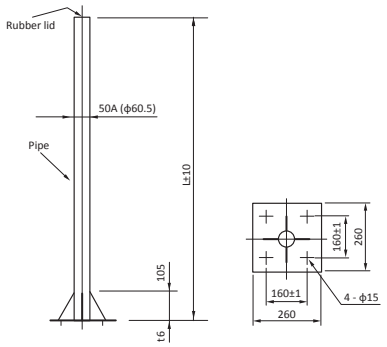

## ■ Electrode Holder with Lift up Type Jet Cleaner LHC-7D

The Lift-up style air jet cleaning system employs a water jet flow which can remove and dissolve crystalline fouling effectively. The water jet produced in the transparent decontamination enclosure works together with a jet mixture of chemical mist and air.

This setup prevents the washing nozzle from clogging as well as sample water from diluting from wash water and chemical solution.

**Specifications**

| | |
|---|---|
| Cleaning method | : Lift-up style water jet<br>· Chemical mist intermittent cleaning |
| Power | : 100V AC±10%, 50/60Hz |
| Air requirements | : Instrument air 0.3 to 0.7MPa |
| Wash water requirements | : Industrial water or plant water 0.2 to 0.5MPa |
| Cleaning chemical requirements | : Tank capacity; 20L<br>(Effective volume; Approx. 18L)<br>Concentration; 5% to 15% Hydrochloric acid or nitric solution |

Please see LHC-7D specification sheet for more details

## ■ Selection table of various cleaning methods (recommended)

○: Effective △: Small effect —: Inappropriate

| Nature of Fouling | Measurement target / process | pH electrode automatic cleaning system | | | | | | Notes |
|---|---|---|---|---|---|---|---|---|
| | | Ultrasound UHC | Brush BHC | Water jet JHC | Chemical RHC | Pulse air-jet PHC | Lift-up Jet LHC | |
| Suspended Fibrous Cohesive Algae Microorganism | Wastewater treatment water control* | ○ | △ | ○ | ○ | ○ | ○ | Gravel or sold cannot be mixed with BHC/JHC/PHC Electrode may be damaged<br>The asterisk mark indicates crystalline scale adhesion during the chemical injection control process |
| | Sewage and human waste treatment processes | △ | — | ○ | — | ○ | ○ | |
| | River lakes and marshes, sea water | ○ | △ | △ | — | ○ | — | |
| | Marine product processing and aquaculture | ○ | ○ | △ | — | ○ | ○ | |
| | Water treatment process* | ○ | ○ | △ | ○ | ○ | ○ | |
| | Cooling water, pure water equipment* | ○ | △ | — | ○ | ○ | ○ | |
| | Food processing, sugar production* | ○ | △ | — | — | — | ○ | |
| | Final effluent monitoring | ○ | △ | △ | — | ○ | ○ | |
| Crystalline Scale | Desulfurization and absorbent control | — | — | — | ○ | — | ○ | $CaCO_3$ / $CaSO_4$ / $Fe(OH)_2$ / $FeCl_3$ dissolved with chemical solution |
| | Above slurry liquid control | — | — | — | ○ | — | ○ | |
| | Metal wastewater tretment control | △ | — | △ | ○ | △ | ○ | |
| Oil contamination | Wastewater treatment process | △ | — | — | ○ | — | ○ | Diesel oil, machine oil, etc. dissolved in chemical solution |
| | Oil refining process | △ | — | — | ○ | — | ○ | |

**DKK-TOA** CORPORATION

**CAUTION** Please read the operation manual carefully before using producuts.

Overseas Sales Division:
DKK-TOA Corporation
29-10, 1-Chome, Takadanobaba, Shinjuku-ku,
Tokyo 169-8648 Japan
Tel : +81-3-3202-0225 Fax : +81-3-3202-5685
E-mail : intsales@dkktoa.com

https://www.toadkk.com/english/

Information and specifications are subject to change without notice.

Issued 04/2022